BLDC 20-OR

46.014 D

Brushless 3 – Phase DC Motor

Rated Voltage	No Load Speed	Rated Speed	Cont. Power	Rated Torque	Current at rated Speed	Efficiency at Rated Speed
[V]	[rpm]	[rpm]	[W]	[mNm]	[A]	[%]
9	5.900	3.200	2,38	7,1	0,44	63

Motor Code: 120988800058

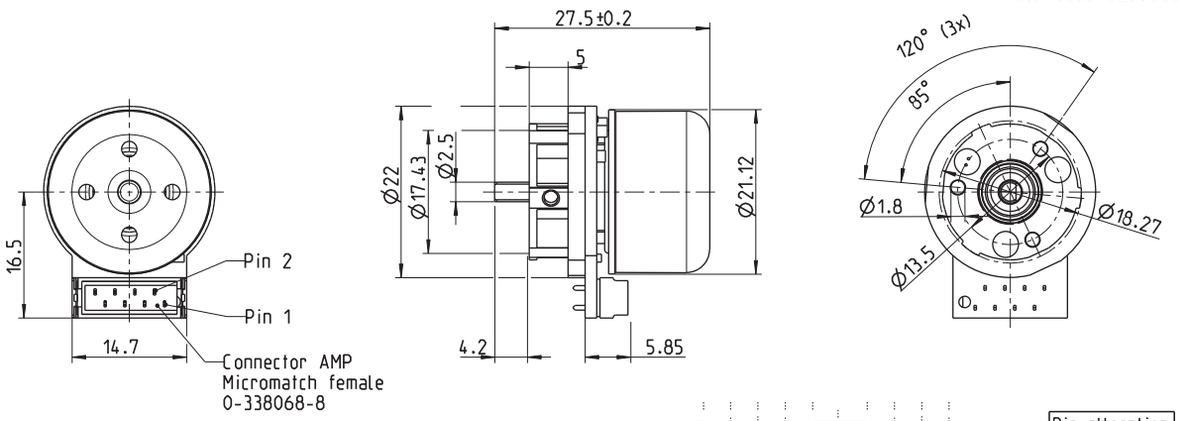

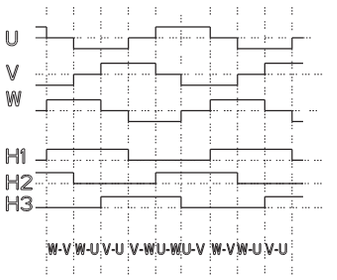

Pin allocation:	
Pin 1	H1
Pin 2	VCC
Pin 3	H3
Pin 4	W 3
Pin 5	GND
Pin 6	W 1
Pin 7	H2
Pin 8	W 2

General informations

- **Class of protection:** IP20
- **Mounting position:** free
- **Duty cycle:** up to 100 %
- **Bearing system:** Ball Bearings
- **Torque Constant:** 13,8 mNm/A
- **Weight:** 0,03 kg
- **Rotor Inertia:** 9,25 gcm²
- **Oper. Temp. Range:** 0 °C to +85 °C
- **Max. Temp. Rise:** 70 K
- **Direction of Rotation:** CW / CCW
- **Class of Insulation:** H
- **Shaft Material:** Steel, not hardened
- **Number of Poles:** 6

Options

- **Integrated Drive Electro.:** No
- **Planetary Gearbox:** Yes

Features

- High power-to-volume ratio
- High efficiency at duty point
- Extremely reliable

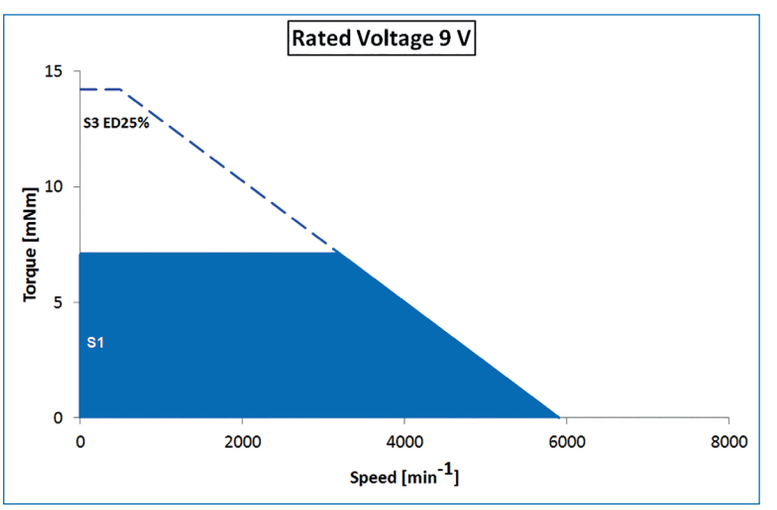

NMB Technologies Corporation
A MinebeaMitsumi Company
39830 Grand River Avenue
Novi, MI 48375
Phone: 248-919-2250
eMail: info@nmbtc.com
nmbtc.com

MinebeaMitsumi
Passion to Create Value through Difference

© PM DM 2015, technical changes reserved